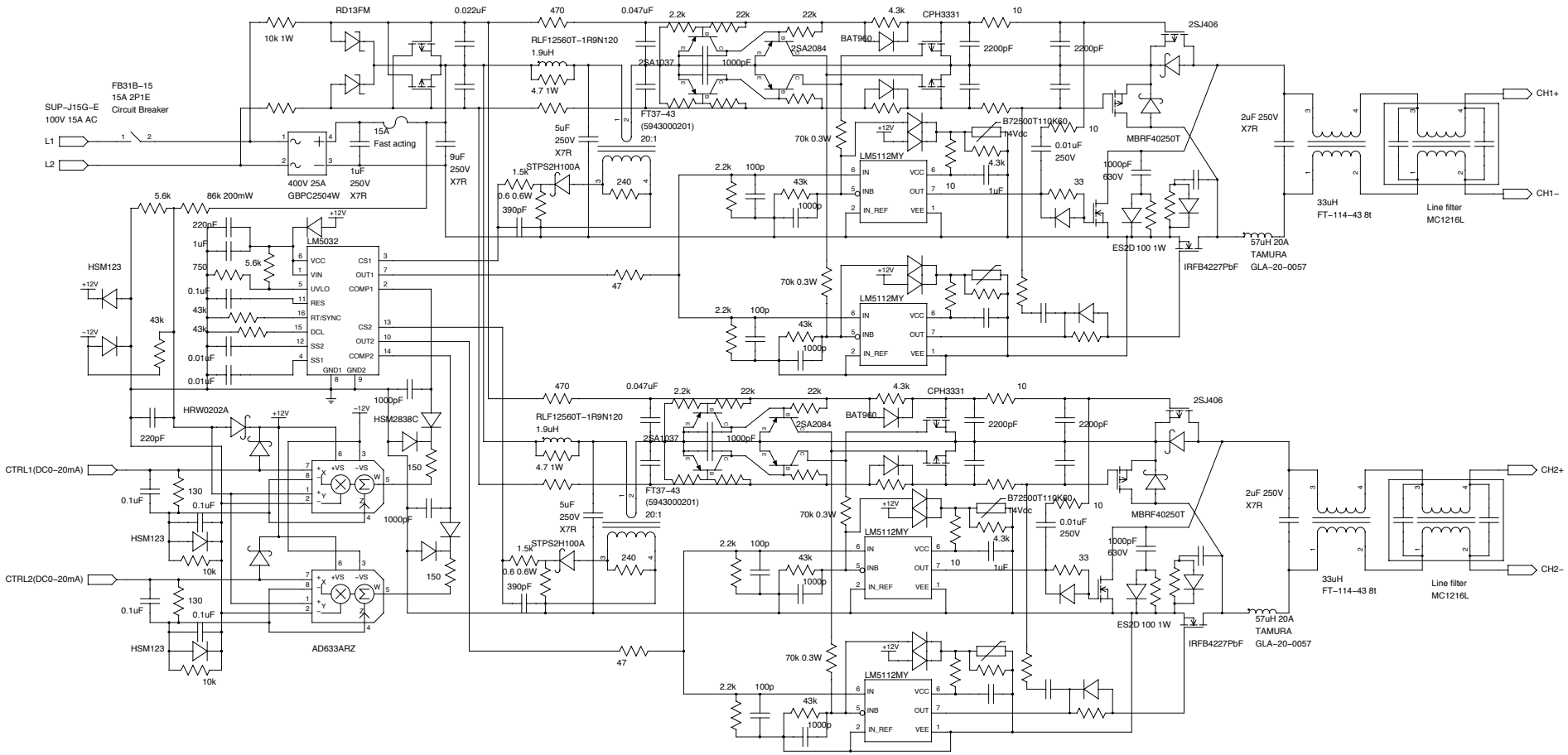
SUP-J15G-E
100V 15A AC
FB31B-15
15A 2P1E
Circuit Breaker
L1
L2
15A
Fast acting
400V 25A
GBPC2504W
1uF
250V
X7R
9uF
250V
X7R
10k 1W
RD13FM
0.022uF
470
RLF12560T-1R9N120
1.9uH
4.7 1W
5uF
250V
X7R
0.047uF
2SA1037
FT37-43
(5943000201)
20:1
2.2k
22k
22k
1000pF
2SA2084
4.3k
BAT960
CPH3331
10
2200pF
2200pF
2SJ406
B72500T110K60
T4Vdc
10
0.01uF
250V
4.3k
1uF
33
1000pF
630V
MBRF40250T
2uF 250V
X7R
33uH
FT-114-43 8t
Line filter
MC1216L
CH1+
CH1-
CH2+
CH2-
57uH 20A
TAMURA
GLA-20-0057
IRFB4227PbF
ES2D 100 1W
70k 0.3W
LM5112MY
IN
INB
IN_REF
VCC
OUT
VEE
+12V
2.2k
100p
43k
1000p
STPS2H100A
1.5k
0.6 0.6W
390pF
240
47
5.6k
86k 200mW
220pF
1uF
750
0.1uF
43k
43k
0.01uF
0.01uF
LM5032
VCC
VIN
UVLO
RES
RT/SYNC
DCL
SS2
SS1
GND1
GND2
CS1
OUT1
COMP1
CS2
OUT2
COMP2
HSM123
-12V
HRW0202A
HSM2838C
1000pF
150
CTRL1(DC0-20mA)
CTRL2(DC0-20mA)
130
0.1uF
10k
AD633ARZ
+VS
-VS
W
X
Y
Z